THE INFORMATION CONTAINED IN THIS DRAWING IS THE SOLE PROPERTY OF ENLOGIC .ANY REPRODUCTION IN PART OR WHOLE WITHOUT WRITTEN PERMISSION OF ENLOGIC IS PROHIBITED .

INPUT POWER CORD FIELD REWIREABLE

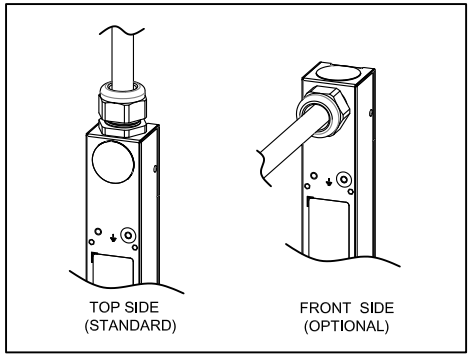

PLUG DETAIL

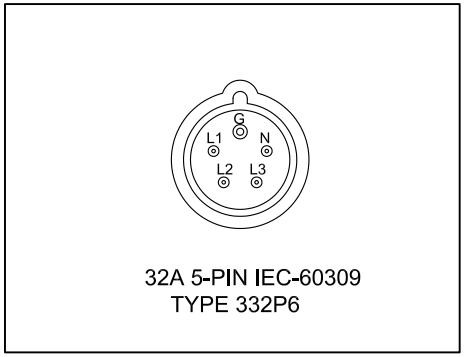

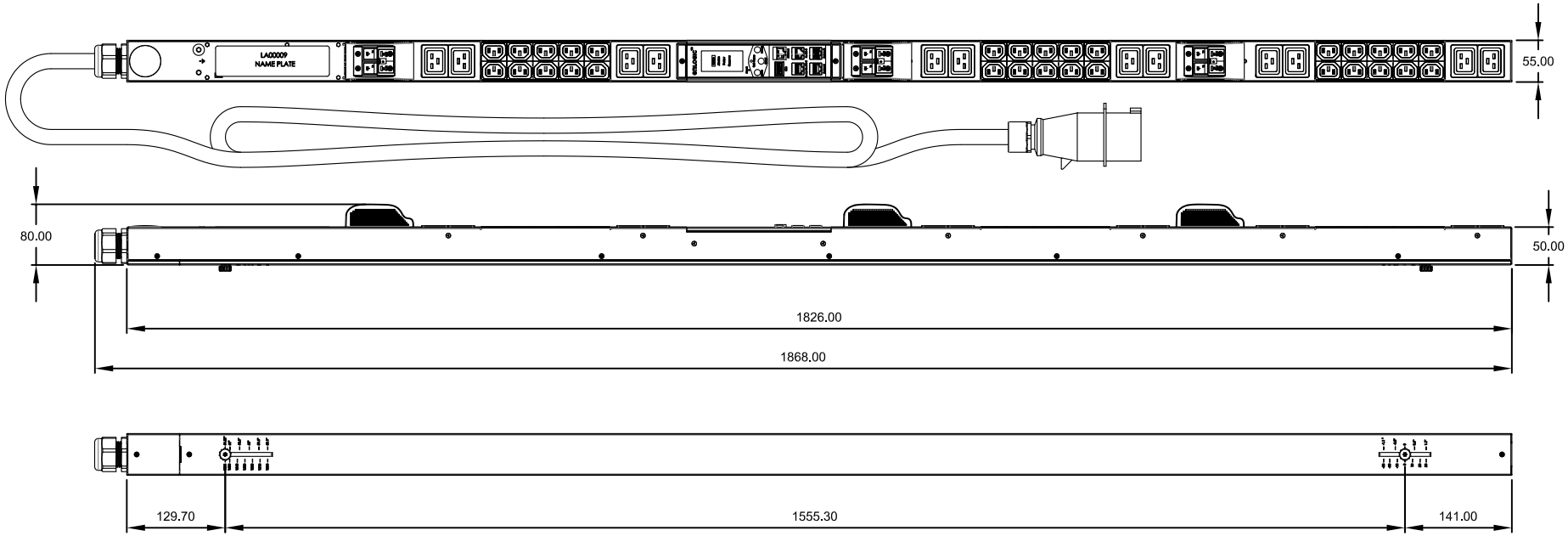

ADJUSTABLE TOOLLESS INSTALLATION PEGS

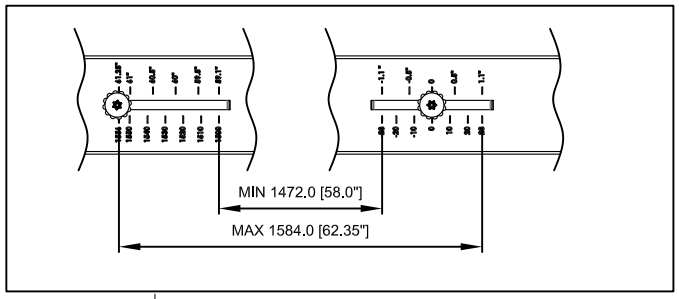

NOTES:

1. UNLESS OTHER SPECIFIED, ALL DIMENSIONS ARE IN MM[IN]
2. SEE PRODUCT OVERVIEW AND SPECIFICATIONS SHEET FOR FURTHER INFORMATION
3. STANDARD INPUT POWER CORD LENGTH IS 3000MM[118.0IN]
4. DETAILED INSTALLATION INSTRUCTIONS CAN BE FOUND IN THE QUICK START GUIDE
5. BRACKET KITS TO MOUNT TO SPECIFIC RACKS & ENCLOSURES ARE AVAILABLE AS OPTIONS
6. CONNECT SUPPLEMENTARY EXTERNAL EARTH GROUND TO THE M5 SIZE THREADED NUT

UNLESS NOTED, DIMENSIONS IN MILLIMETERS & TOLERANCES ARE:
X ± 1 MM
X.X ± 0.5 MM
X.XX ± 0.20 MM
Ø.X ± 0.3 MM
Ø.XX ± 0.10 MM
X° ± 1°
X.X° ± 0.5°
BRACKETED DIMENSIONS ARE IN INCHES FOR REFERENCE ONLY

THIRD ANGLE PROJECTION

INTERPRET PER ASME Y14.5M-1994

DESIGNER & DATE:
CHECKER & DATE:
STANDARDIZATION & DATE:
APPROVER & DATE:
ITEM WEIGHT (REFERENCE ONLY): g

enLOGIC

DESCRIPTION: TA-EN1111

P/N: EN1111

REV:

SCALE 1:6 (DO NOT SCALE DRAWING)

SIZE: A3

SHEET 1 OF 1