THE INFORMATION CONTAINED IN THIS DRAWING IS THE SOLE PROPERTY OF ENLOGIC .ANY REPRODUCTION IN PART OR WHOLE WITHOUT WRITTEN PERMISSION OF ENLOGIC IS PROHIBITED .

INPUT POWER CORD FIELD REWIREABLE

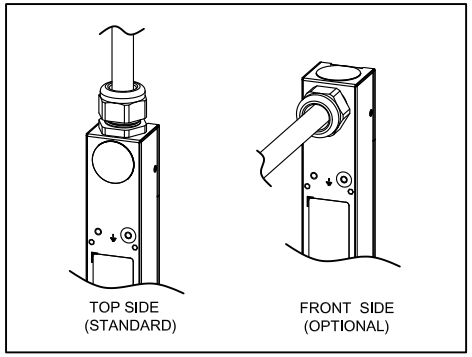

PLUG DETAIL

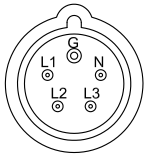

16A 5-PIN IEC-60309
TYPE 332P6

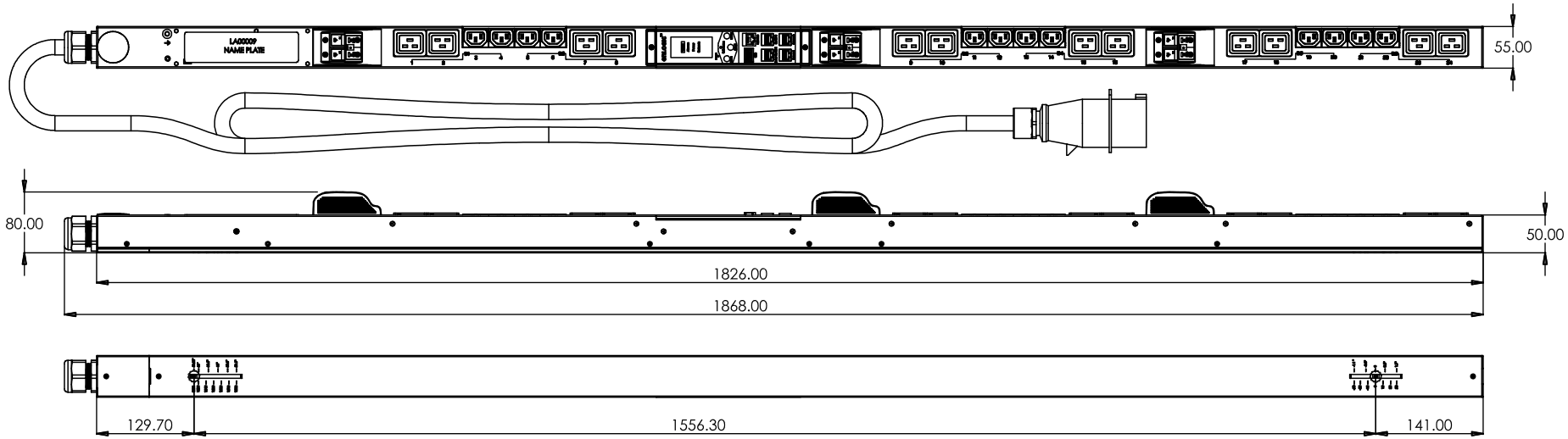

ADJUSTABLE TOOLLESS INSTALLATION PEGS

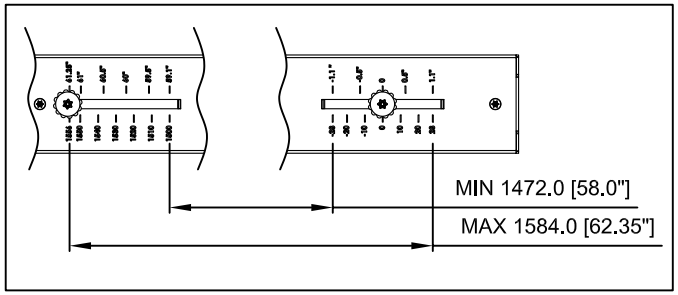

NOTES:

1. UNLESS OTHER SPECIFIED, ALL DIMENSIONS ARE IN MM[IN]
2. SEE PRODUCT OVERVIEW AND SPECIFICATIONS SHEET FOR FURTHER INFORMATION
3. STANDARD INPUT POWER CORD LENGTH IS 3000MM[118.0IN]
4. DETAILED INSTALLATION INSTRUCTIONS CAN BE FOUND IN THE QUICK START GUIDE
5. BRACKET KITS TO MOUNT TO SPECIFIC RACKS & ENCLOSURES ARE AVAILABLE AS OPTIONS
6. CONNECT SUPPLEMENTARY EXTERNAL EARTH GROUND TO THE M5 SIZE THREADED NUT

UNLESS NOTED, DIMENSIONS IN MILLIMETERS & TOLERANCES ARE: X ± 1 MM; X.X ± 0.5 MM; X.XX ± 0.20 MM; Ø.X ± 0.3 MM; Ø.XX ± 0.10 MM; X° ± 1°; X.X° ± 0.5°. BRACKETED DIMENSIONS ARE IN INCHES FOR REFERENCE ONLY	DESIGNER & DATE:	enLOGIC
	CHECKER & DATE:	
	STANDARDIZATION & DATE:	DESCRIPTION: TOP ASSEMBLY EN5111
	APPROVER & DATE:	P/N: TA-EN5111 REV:
THIRD ANGLE PROJECTION	ITEM WEIGHT (REFERENCE ONLY): g	
INTERPRET PER ASME Y14.5M-1994		SCALE 1:6 (DO NOT SCALE DRAWING) SIZE: A3 SHEET 1 OF 1